PRN No.	Total No. of Questions: 09
RBT23ME058	

QP Code:

JSPM's
Rajarshi Shahu College of Engineering, Tathawade, Pune- 411033
(An autonomous institute affiliated to Savitribai Phule Pune University)

ESEFY2324(M) 23-24

Examination: End Semester Examinations (ESE)

Semester: II **Academic Year: 2023-24**

Class: F. Y. B. Tech. (All Programs)
Department: Engineering Sciences and Humanities

Subject Code: CE1201 **Subject Name and pattern: Engineering Mechanics (2023)**

Duration: 2:30 Hour **Max. Marks: 50 Marks**

Instructions to the Candidates
1. In Section A, Q.1, Q. 2 and Q.3 is compulsory.
2. In section B, Solve Q.4 or Q.5, Q.6 or Q.7 and Q.8 or Q.9.
3. Assume suitable and necessary data wherever required.

Q. No.		Section-A	Marks	BL	CO
1		**Solve any one**			
	a	Determine the resultant of four forces tangent to circle of radius 4 m, as shown in figure below. Find its location with respect to 'O.'	4	BL3	CO1

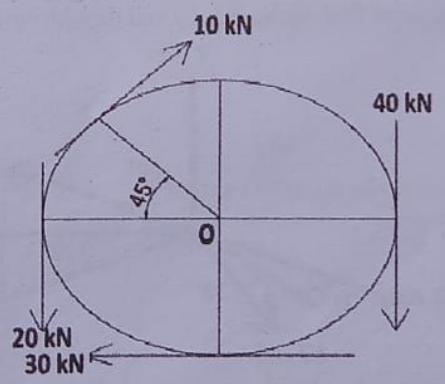

	b	The four coplanar forces are acting at a point as shown in Fig. Determine the resultant in magnitude and direction.	4	BL3	CO1

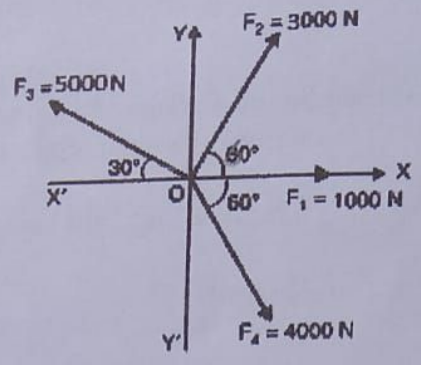

2 **Solve any one**

a Determine the centroid of following composite section by removing the shaded circular part from section. The radius of circle is 1.5 cm and radius of semicircle is 4 cm. 4 BL

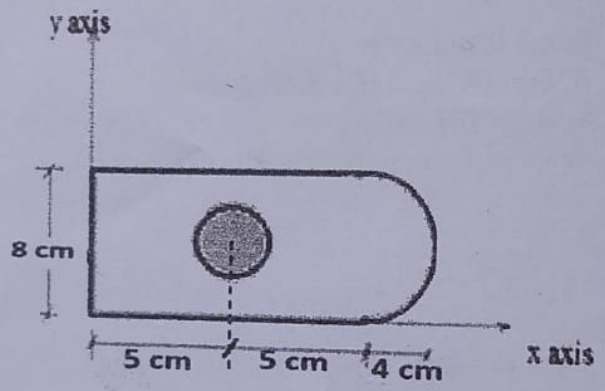

b Determine the components of 15 kN and 17 kN forces as shown in figure. Also find angles θx , θy and θz with co-ordinate axis. 4 BL3

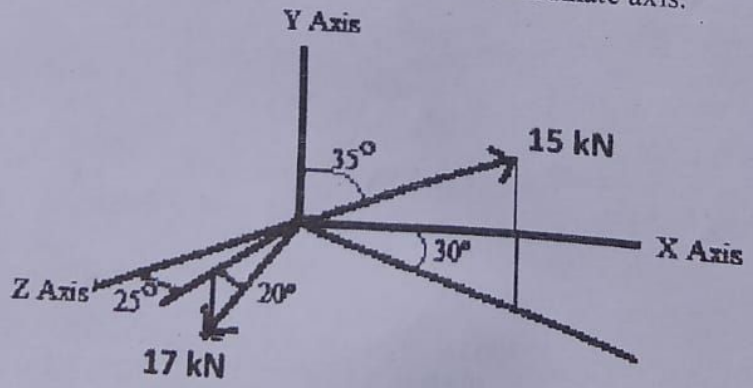

3 **Solve any one**

a A vehicle travels on straight line such that its position $X=14t^6-7t^3+21$, where X is in 'meter' and time is in 'second'.
Determine:

1) Time when velocity is zero (v=0)
2) Distance travelled in 2 second. 4 BL3

b A projectile is fired with a velocity 60m/s on horizontal plane. find its time of flight in following cases- 4 BL3 CO3

a) Its maximum height is 4 times horizontal range.
b) Its maximum height is half of horizontal range.

Section –B

4 a A bar AB of 18 m long rest in horizontal position as shown in figure on smooth planes. Find distance 'X' at which a load P = 500 N is to be placed to keep bar in equilibrium. Neglect the weight of bar. 6 BL3 CO4

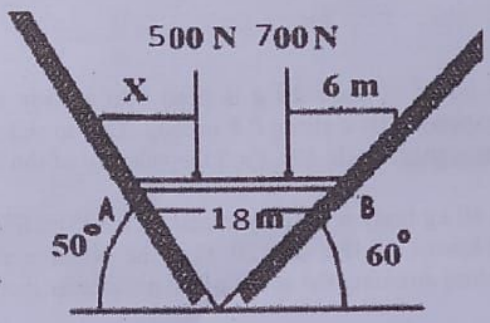

b Determine reactions at supports 'P and Q.' 7 BL3 CO4

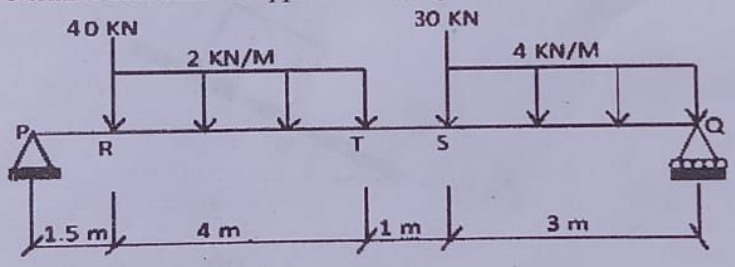

OR

5 a Two identical rollers each of weight 500N are supported by an inclined plane and vertical wall as shown in figure. Find reactions at a point of contact 'A, B and C. 6 BL3 CO4

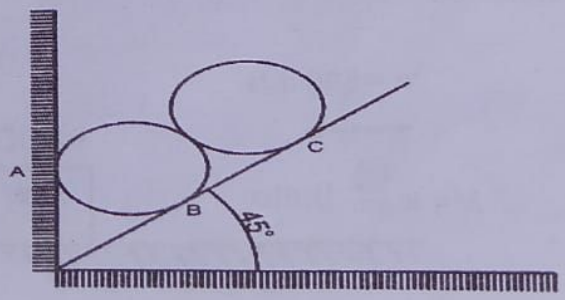

b Determine reactions at all supports for a beam shown in below figure. 7 BL3 CO

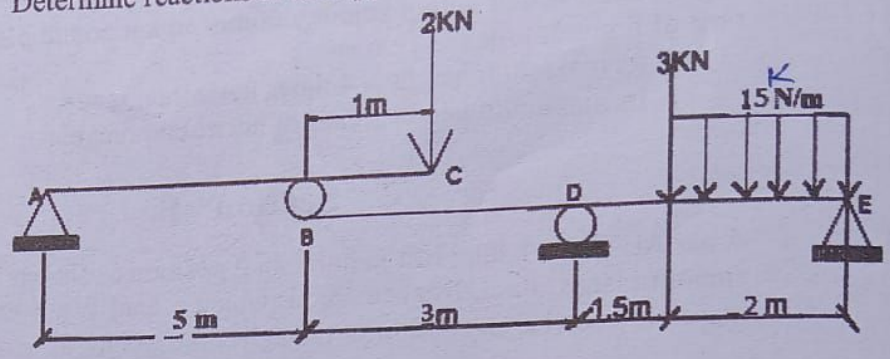

6 a A bullet of mass 20 g is fired into a body of mass 30 kg, which is suspended by a string 0.8 m long. Due to this impact, the body swings through an angle 40°. Find the velocity of the bullet. 6 BL3 CO

b A 60 kg body is initially at rest on a 30° inclined plane with coefficient of kinetic friction μ=0.20. Find the distance and the time body travels before attaining the speed of 30 m/s. Refer the figure. 6 BL3 CO

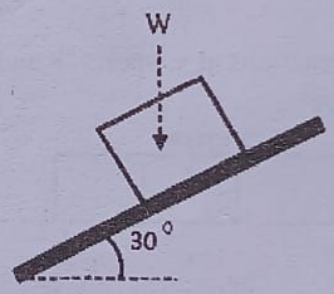

OR

7 a A 40 g bullet is fired with a velocity of magnitude V_0 = 500 m/s into a 5 kg block of wood which is stationary as shown in fig. Knowing that the coefficient of kinetic friction between the block and the floor is 0.25. Determine:
(1) How far the block will move.
(2) The Percentage of the initial energy lost in friction between the block and the floor. 6 BL3 CO

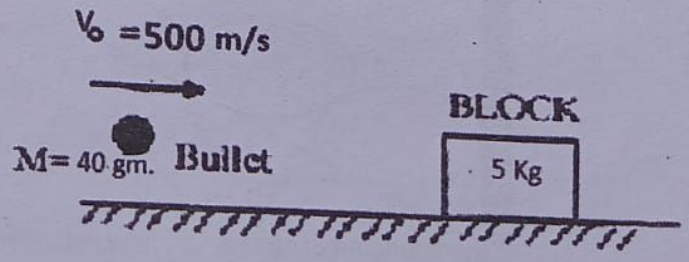

b A block of mass 50 kg is released from rest on the top of inclined plane A. It travels on incline and comes to rest at 'C'. Find the distance **x** it travels, and maximum velocity attains during motion. Take $\mu k = 0.3$. Refer fig.

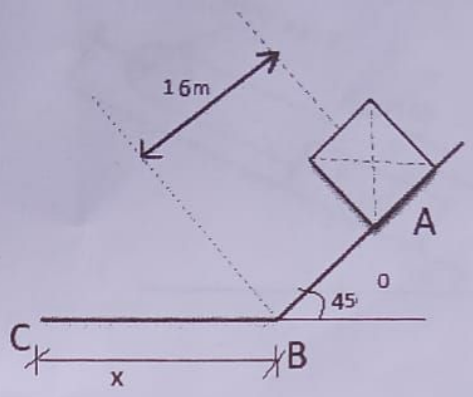

6 BL3 CO5

8 **a** Two loads are supported from the cable ABC as shown in fig. Knowing that b = 3 m, determine:
a) Required magnitude of horizontal force 'P'
b) Corresponding distance 'a'

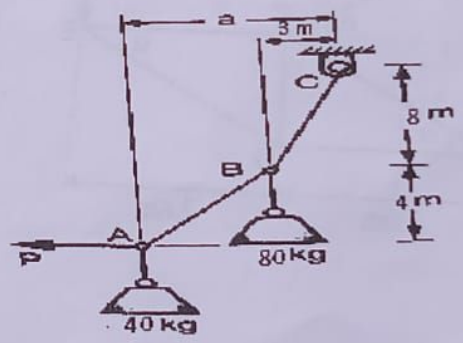

6 BL3 CO6

b For the truss shown in fig. having hinge at A and Roller at B, find the forces in all the members mentioning their nature viz. C or T.

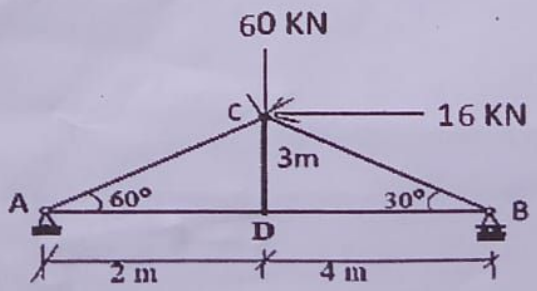

7 BL3 CO6

OR

9 a Find minimum value of 'F' to move block 'A' up the plane. Coefficient of friction for all rubbing surfaces is 0.3.

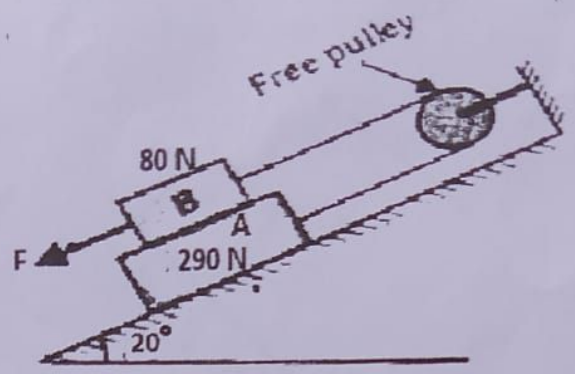

6 BL3 CO6

b Determine forces in all members of Truss shown in figure mentioning their nature viz. C or T.

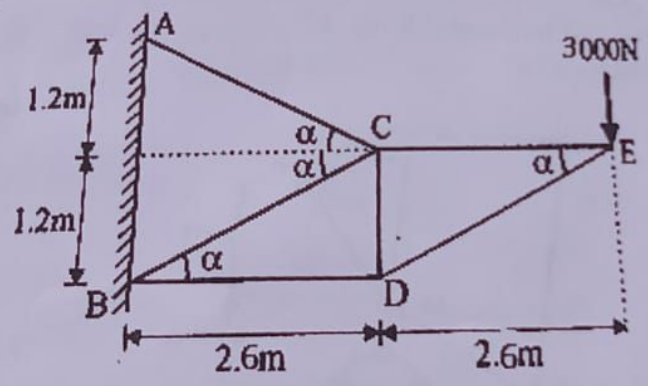

7 BL3 CO6

**********BEST of LUCK**********